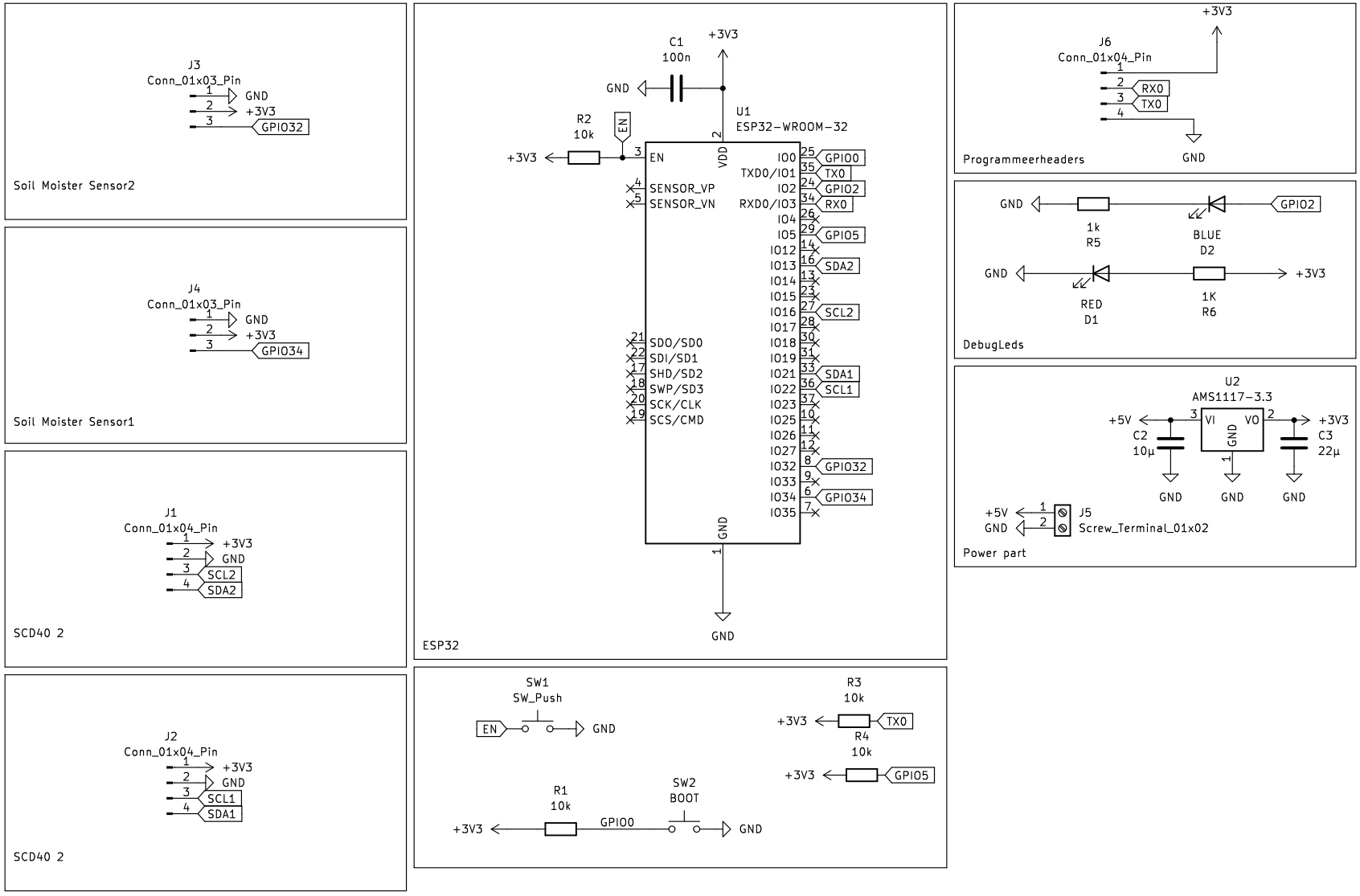

Sheet: /
File: soil_moister_air.kicad_sch

Title:

Size: A4	Date:	**Rev:**
KiCad E.D.A. kicad 7.0.9		Id: 1/1